Current part is item (10) on diagram. Available at www.oshkoshequipment.com

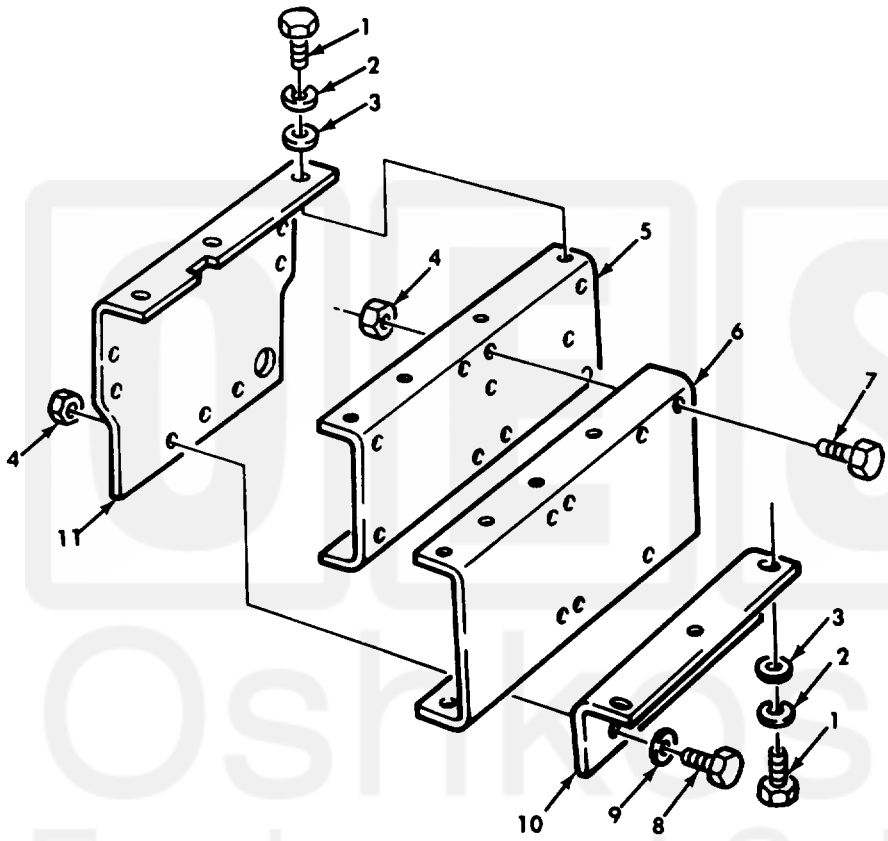

Figure 373. Front Winch Brackets and Mounting Hardware.

Current part is item (10) on diagram. Available at www.oshkoshequipment.com

Current part is item (10) on diagram. Available at www.oshkoshequipment.com

(1) ITEM NO	(2) SMR CODE	(3) CAGEC	(4) PART NUMBER	(5) DESCRIPTION AND USABLE ON CODES(UOC)	(6) QTY
				GROUP 20 HOIST,WINCH,AND POWER TAKEOFF	
				2001 HOIST,CRANE,CR WINCH ASSEMBLY	
				FIG.373 FRONT WINCH BRACKETS AND MOUNTING HARDWARE	
1	PAOZZ	96906	MS90727-114	SCREW,CAP,HEXAGON H UOC:622	10
1	PAOZZ	96906	MS90727-114	SCREW,CAP,HEXAGON H UOC:614,620,621,623,628,633,634, 636,637	12
2	PAOZZ	96906	MS35338-48	WASHER,LOCK UOC:614	10
2	PAOZZ	96906	MS35338-48	WASHER,LOCK UOC:614,620,621,623,625,633,634 636,637	12
3	PAOZZ	96906	MS27183-18	WASHER,FLAT FRONT WINCH BRACKET UOC:622	10
3	PAOZZ	96906	MS27183-18	WASHER,FLAT UOC:614,620,621,623,625,628,633,634 636,637	12
4	PAOZZ	96906	MS21045-8	NUT,SELF-LOCKING,HE UOC:614,620,621,622,623,625,628,633 634,636,637	21
5	PBOZZ	19207	10871076	CHANNEL,LIFT,VEHICL UOC:614,620,621,622,623,625,628,633, 634,636,637	2
6	PFOZZ	19207	7412381	STRUCTURAL CHANNEL UOC:614,620,621,622,623,625,628,633, 634,636,637	2
7	PAOZZ	96906	MS90727-111	SCREW,CAP,HEXAGON H UOC:614,620,621,622,623,625,628,633, 634,636,637	15
8	PAOZZ	96906	MS90726-113	SCREW,CAP,HEXAGON H UOC:614,620,621,622,623,625,633, 634,636,637	6
9	PAOZZ	96906	MS27183-18	WASHER,FLAT UOC:614,620,621,622,623,625,628,633 634,636,637	6
10	PFOZZ	19207	10871077	BRACKET,ANGLE UOC:614,620,621,622,623,625,628,633, 634,636,637	1
11	PFOZZ	19207	7412380	BRACKET,ANGLE UOC:614,620,621,622,623,625,628,633, 634,636,637	1
				END OF FIGURE	

Current part is item (10) on diagram. Available at www.oshkoshequipment.com